GENERAL NOTES:
1. MATERIAL: **ALUMINUM, 6061-T651**
2. SPECIAL FINISH: **Black anodization**
3. SURFACE ROUGHNESS (UNLESS SPECIFIED OTHERWISE): (AVERAGE MICRO-INCHES)
4. INTERPRET DIMENSIONS AND TOLERANCES PER ASME Y14.5M-1994
5. DEBURR AND BREAK ALL SHARP EDGES, MAX 0.010" (UNLESS SPECIFIED OTHERWISE)
6. PARTS ARE TO BE CLEAN AND FREE OF OIL, GREASE, AND OTHER CONTAMINANTS
7. DIMENSIONS INCLUDE CHEMICALLY APPLIED FINISHES IF APPLICABLE

HOLE TABLE

| HOLE | XDIM | YDIM | DESCRIPTION |
|---|---|---|---|
| A1 | 1.70 | -2.50 | Ø.563 THRU |
| A2 | 11.30 | -2.50 | Ø.563 THRU |
| B1 | .75 | -5.00 | Ø.150 THRU<br>⌵ Ø.28 X 82° |
| B2 | 12.25 | -5.00 | Ø.150 THRU<br>⌵ Ø.28 X 82° |
| B3 | .75 | -4.00 | Ø.150 THRU<br>⌵ Ø.28 X 82° |
| B4 | 12.25 | -4.00 | Ø.150 THRU<br>⌵ Ø.28 X 82° |
| B5 | .75 | -3.38 | Ø.150 THRU<br>⌵ Ø.28 X 82° |
| B6 | 6.50 | -3.38 | Ø.150 THRU<br>⌵ Ø.28 X 82° |
| B7 | 12.25 | -3.38 | Ø.150 THRU<br>⌵ Ø.28 X 82° |
| B8 | .75 | -.13 | Ø.150 THRU<br>⌵ Ø.28 X 82° |
| B9 | 6.50 | -.13 | Ø.150 THRU<br>⌵ Ø.28 X 82° |
| B10 | 12.25 | -.13 | Ø.150 THRU<br>⌵ Ø.28 X 82° |

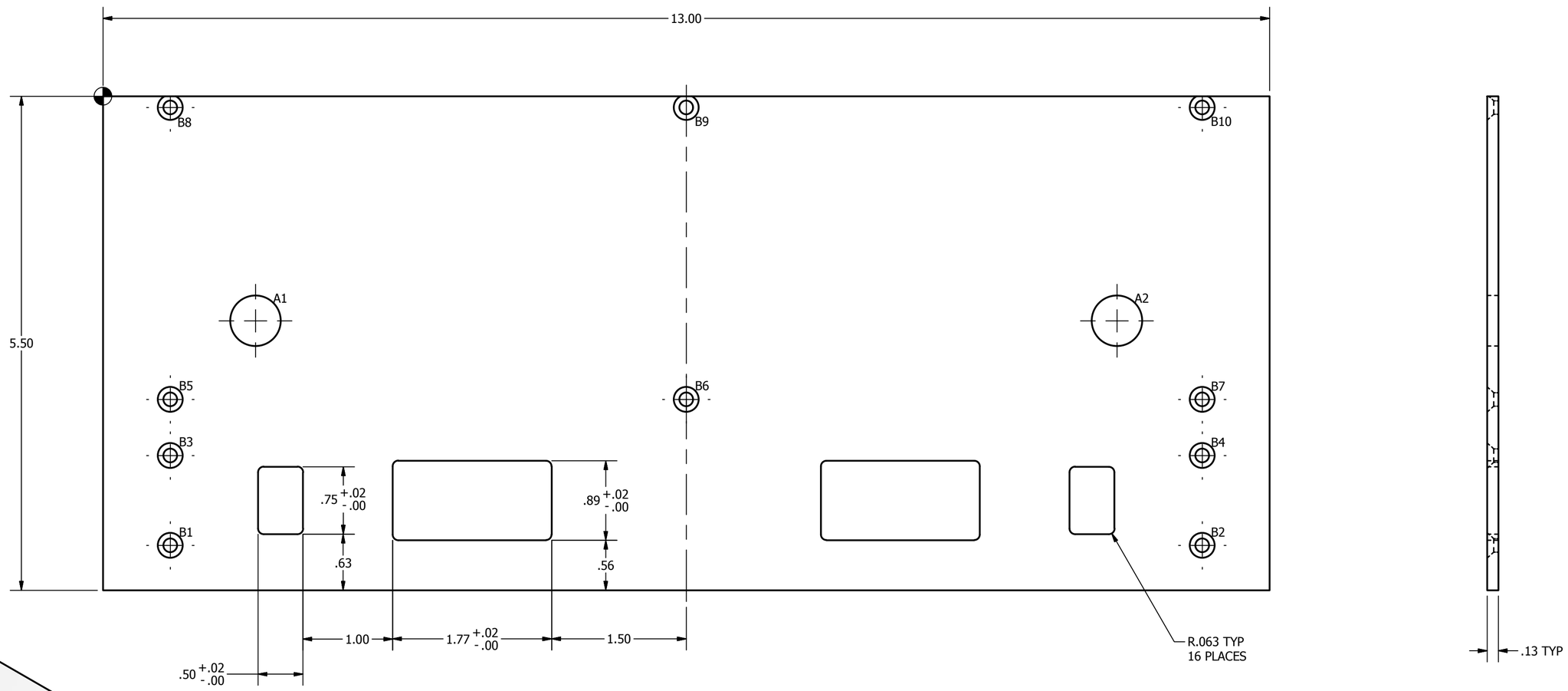


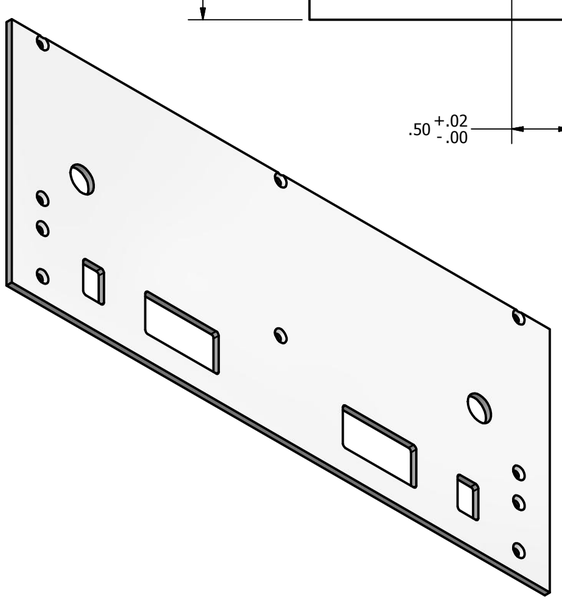

NOTICE:
INFORMATION CONTAINED IN THIS DOCUMENT OR ANY REPRODUCTION THEREOF, IS PROPRIETARY INFORMATION AND PROPERTY OF HOWARD HUGHES MEDICAL INSTITUTE. IT SHALL NOT BE DISCLOSED, COPIED, DUPLICATED OR USED FOR MANUFACTURE, PRODUCTION OR PROCUREMENT, WITHOUT THE EXPRESS WRITTEN PERMISSION OF HOWARD HUGHES MEDICAL INSTITUTE.

(UNLESS SPECIFIED OTHERWISE)
PRIMARY UNITS: INCHES
[SECONDARY UNITS]: MILLIMETERS

PRIMARY TOLERANCES:

| | |
|---|---|
| X.X | ± 0.020 |
| X.XX | ± 0.010 |
| X.XXX | ± 0.005 |
| X.XXXX | ± 0.0005 |
| ANGULAR | ± 0.5 DEG |

- DO NOT SCALE DRAWING -

THIRD ANGLE PROJECTION:

HHMI
HOWARD HUGHES MEDICAL INSTITUTE

HHMI janelia farm research campus

FrontPanel.ipt

| SIZE | PART NUMBER | REV | SHEET |
|---|---|---|---|
| C | Front Panel | 0 | 1 OF 1 |